LOTUS
QUALITY FIRST

Quality First

Lotus Prestige Basic

A+

Prestige Basic S

Prestige Basic Indian Night

Prestige Basic Sand

Prestige Basic Wenge

Lotus Prestige M

A+

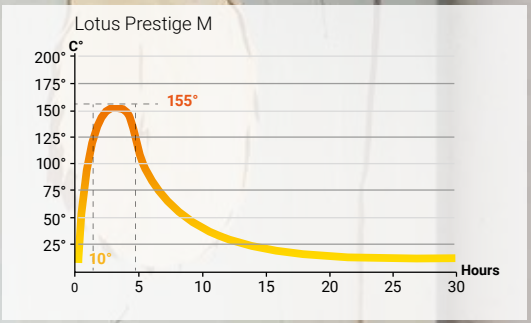

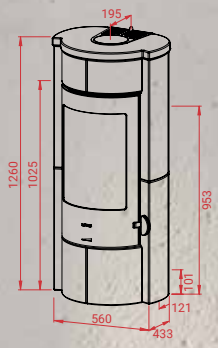

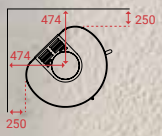

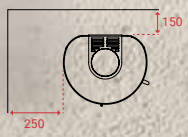

Prestige MST - Optional soapstone top

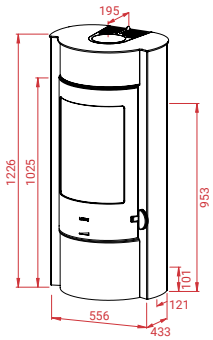

Prestige MST

Prestige M

Prestige M Indian Night

Lotus Prestige Integra

A+

Prestige

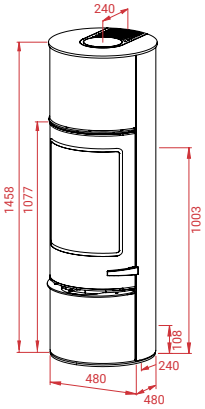

Prestige S

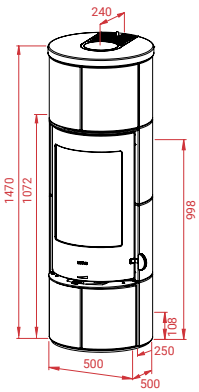

Prestige Magic

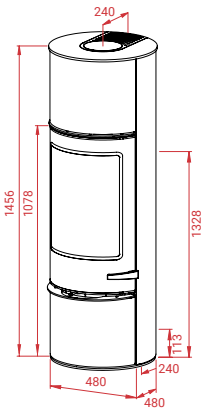

Lotus Living

A+

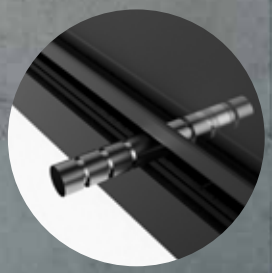

Classic H

Classic Grey H

Classic Black H

Modern Grey H

Modern Black H

Living Cube

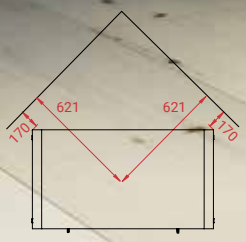

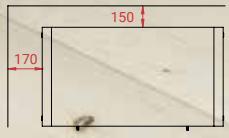

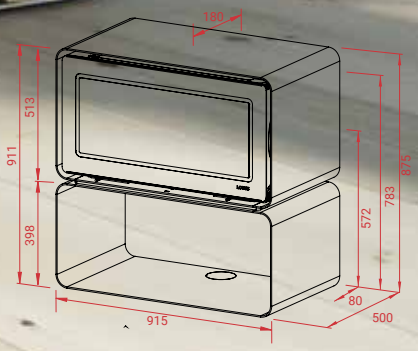

Alpin White

Ocean Dark

Phantom Grey

Living

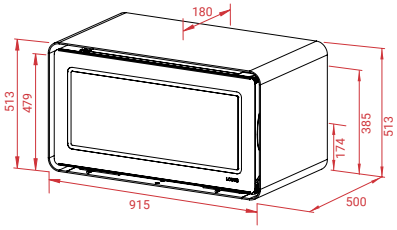

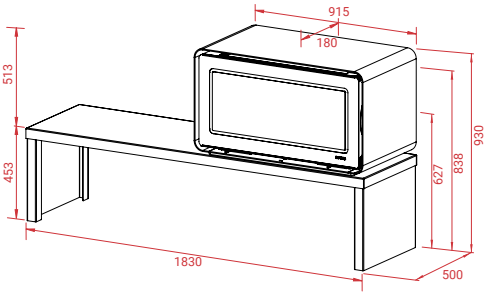

Living Base

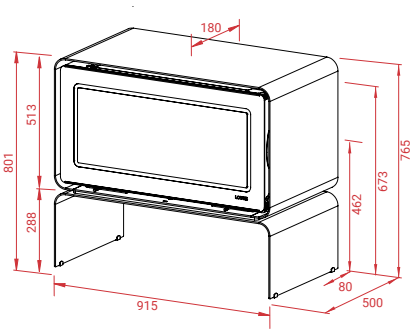

Living Furniture

Lotus Mira

A

Optional soapstone top

Mira 3

Mira 4

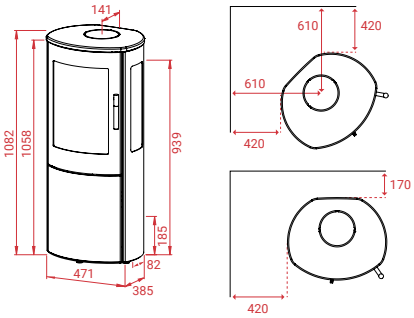

Lotus Liva

A

Optional soapstone top

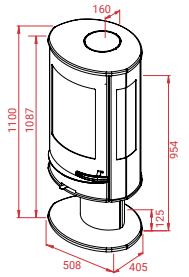

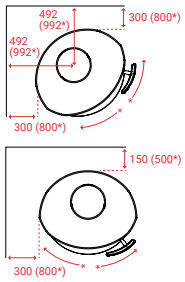

Liva 8 G

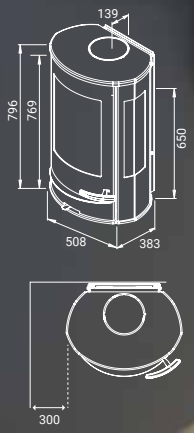

Liva 7 G

Liva 5

Liva 5 G

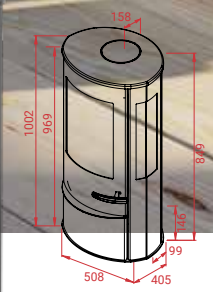

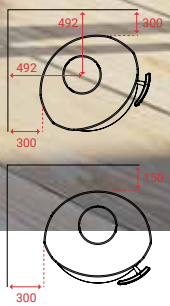

Liva 5 S

Liva 5 Sand

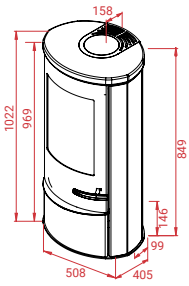

Liva 6

Liva 6 G

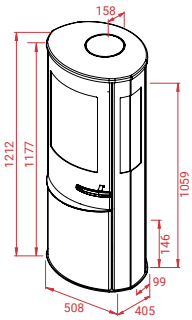

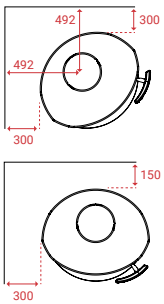

Liva 6 S

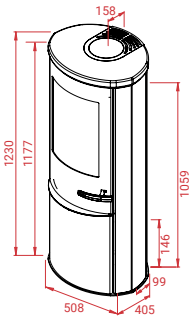

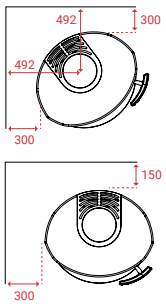

Lotus Prio

A

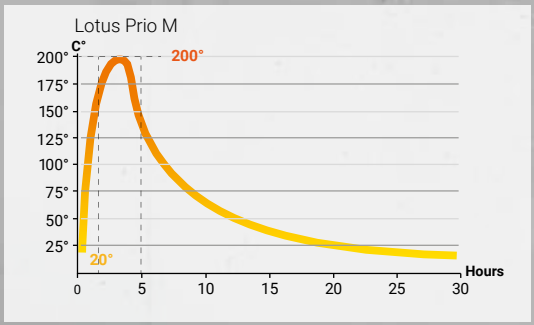
Lotus Prio M
C°
200°
175°
150°
125°
100°
75°
50°
25°
200°
20°
Hours
0
5
10
15
20
25
30

Prio 5 – Grey
Prio 5S
Prio 5 Indian Night
155
1110
1083
966
89
104
540
440

Prio 6
Prio 6S
Prio 6 Indian Night
S + Indian Night
155
1130
1083
966
89
104
540
440

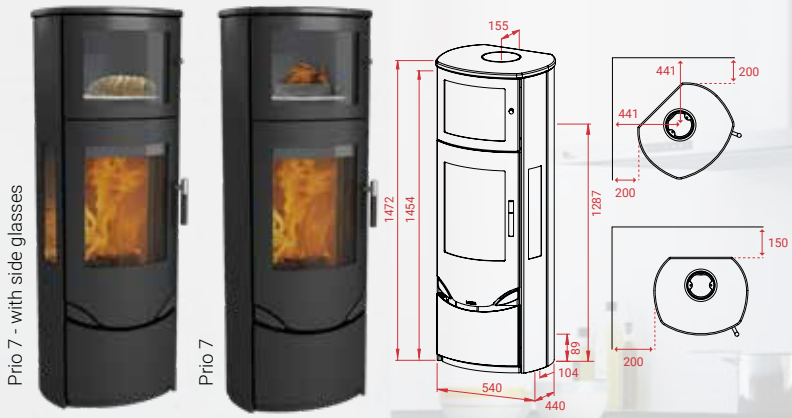
Prio 7 - with side glasses
Prio 7
155
1472
1454
1287
89
104
540
440
441
200
441
200
150
200

Prio 7M Indian Night - with side glasses
Prio 7M Indian Night
Prio 7M - with side glasses
Prio 7M

Prio M Indian Night - with side glasses
Prio M Indian Night
Prio M - with side glasses
Prio M

Lotus 2000

A+

2060

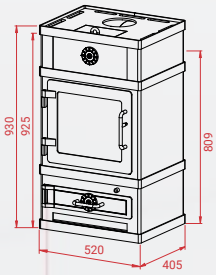

2080

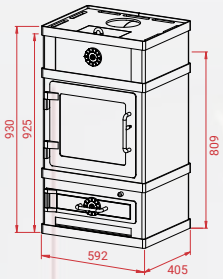

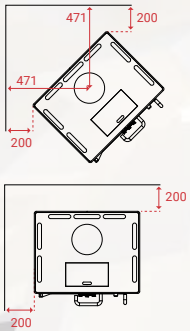

2060/2260

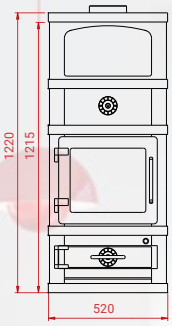

2080/2280

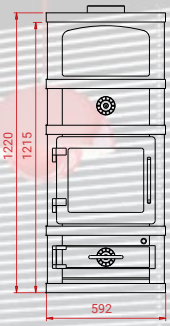

2060/2660

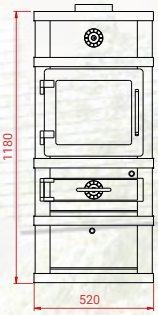

Optional soapstone top

Optional soapstone top

Shape

Modern

Classic

Mondo 3 + Steel top

Mondo 3 Soapstone

Mondo 3 Indian Night + Steel top

Mondo 3 Indian Night

Lotus Mondo 3

A

Mondo 3M Soapstone

Mondo 3M Indian Night

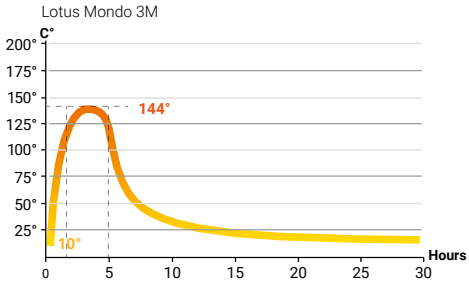

Lotus M

A+

M-Jubilee Sand

M1 Sand

M2 Sand

M3 Sand

M4 Sand

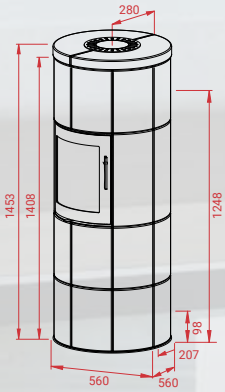

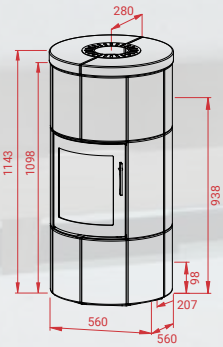

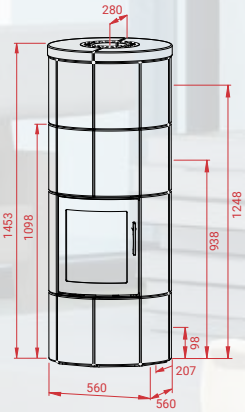

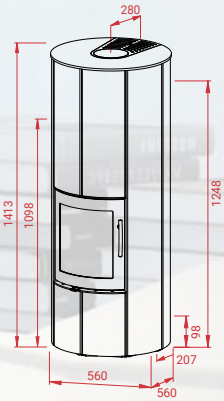

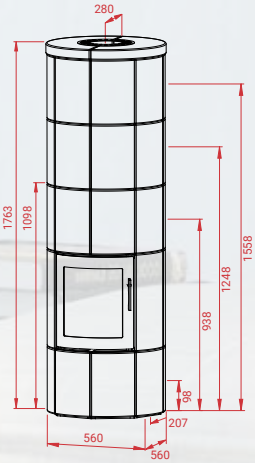

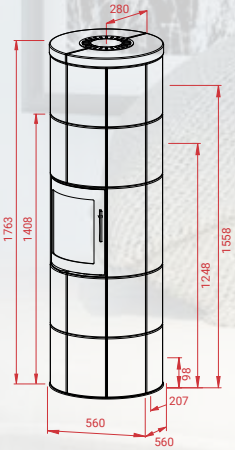

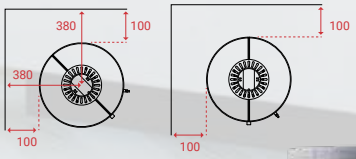

M-Jubilee

M1

M2

M2 ST

M3

M4

Lotus M

A+

M-Jubilee Indian Night

M1 Indian Night

M2 Indian Night

M3 Indian Night

M4 Indian Night

M-Jubilee Wenge

M1 Wenge

M2 Wenge

M3 Wenge

M4 Wenge

Lotus Maestro 1 & 2

A+

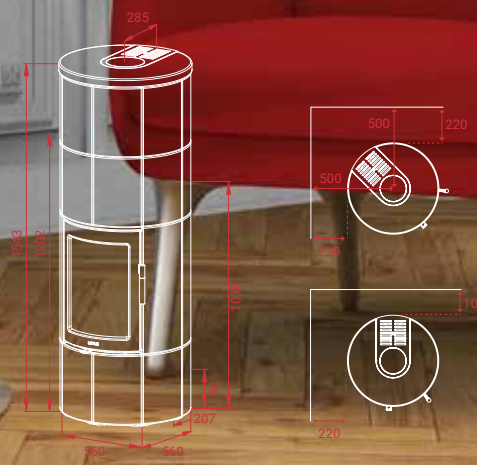

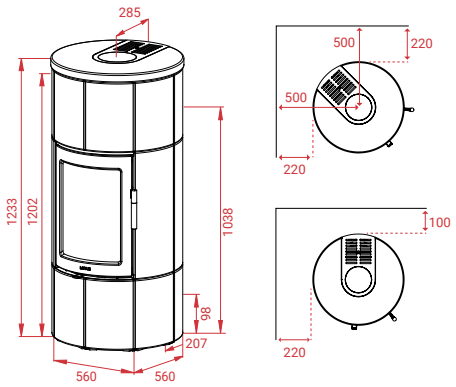

Maestro 1 Indian Night

Maestro 2 Indian Night - Magic door

Maestro 2 - Cooking section

Lotus Maestro 152 M

A+

Maestro 152 M - Grey door

Maestro 152 M - Black door

Maestro 152 M - Magic door

Maestro 152 IN - Grey door

Maestro 152 IN - Black door

Maestro 152 IN - Magic door

Lotus Maestro

A+

Maestro - Magic door

Maestro

Maestro Indian Night - Magic door

Maestro Indian Night

Lotus Jubilee 15

A+

Shape

Modern

Classic

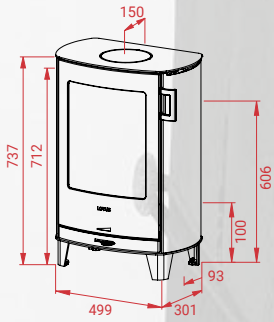

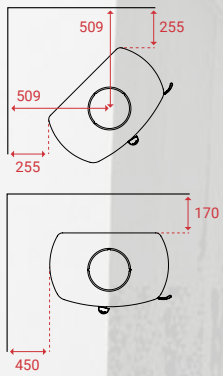

Jubilee Base

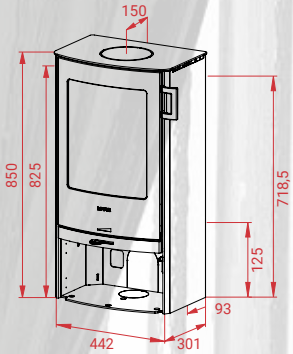

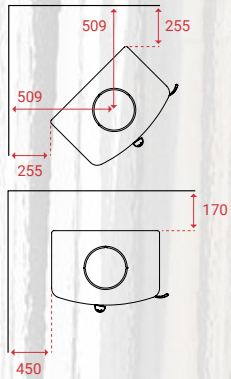

Jubilee Basic

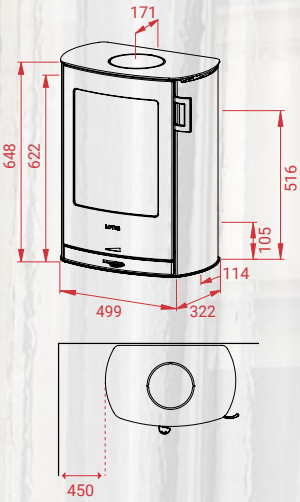

Jubilee Wall

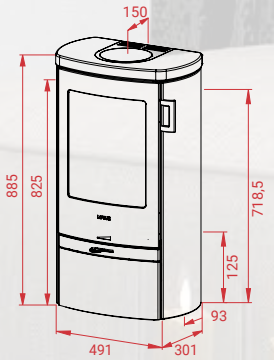

Jubilee 15 Soapstone

Jubilee 15 Indian Night

Jubilee 15

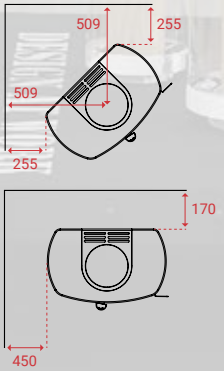

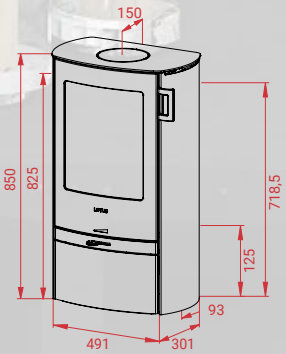

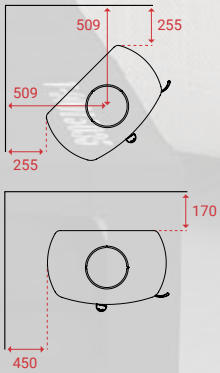

Optional soapstone top

Lotus Jubilee 25

A+

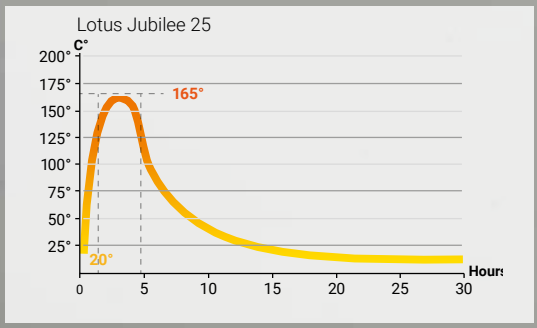

Shape

Modern

Classic

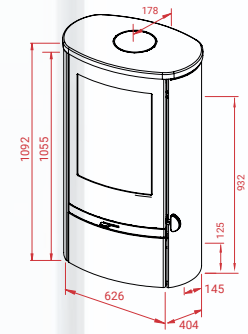

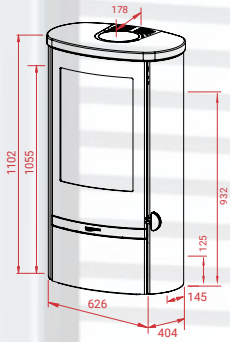

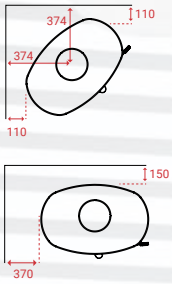

Jubilee 25 Steel

Jubilee 25 S

Jubilee 25 Indian Night

Jubilee 25 M

Jubilee 25 M Indian Night

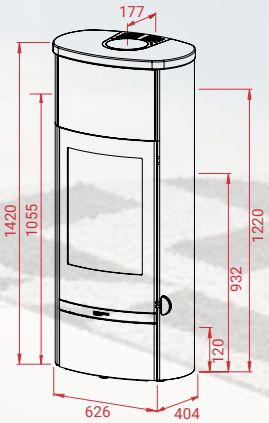

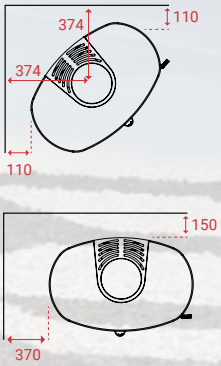

Lotus Jubilee 35

A+

Optional soapstone top

Jubilee 35

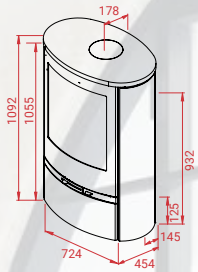

Jubilee 35 S

Jubilee 35 Indian Night

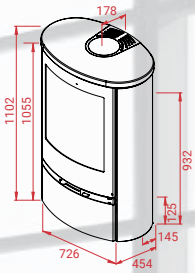

Jubilee 35 - Cooking section

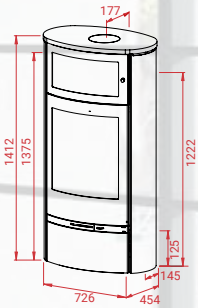

Jubilee 35 S - Cooking section

Jubilee 35 Indian Night - Cooking section

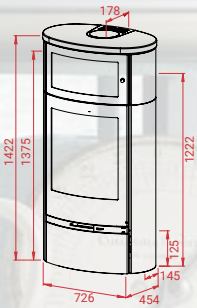

Lotus Jubilee 35 M

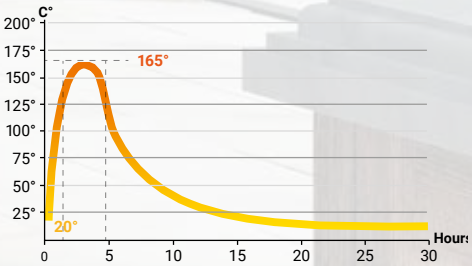

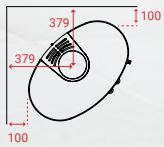

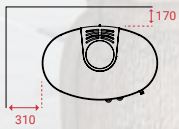

Jubilee 35 M

Jubilee 35 M Indian Night

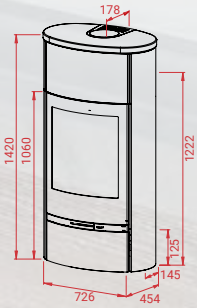

Lotus Style

A

Style 370 Indian Night without base

A+

Style 470W Soapstone without base

A

Style 370 Soapstone

A+

Style 470W Indian Night with extra steel compartment

A+

Style 470W Limestone

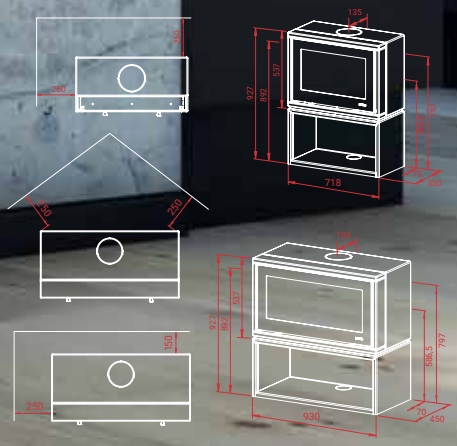

Classic H

Classic Grey H

Classic Black H

Modern Grey H

Modern Black H

Lotus Beto

A+

Beto 470 – Magic door

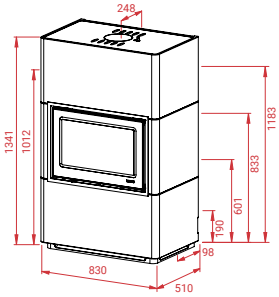

Beto 470W

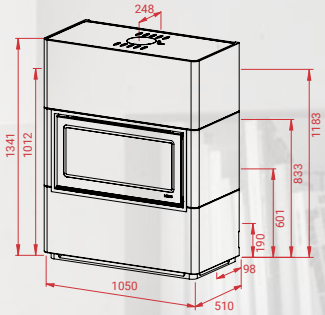

Beto 700 – Magic door

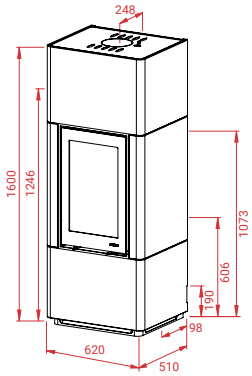

Beto 470M – Grey door

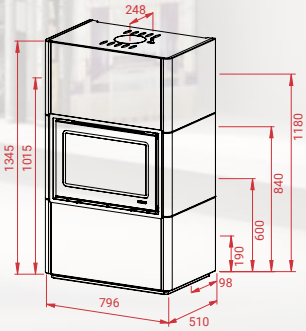

Beto 470WM – Magic door

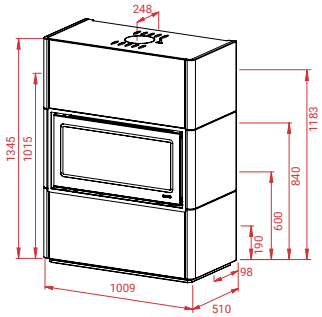

Beto 700M

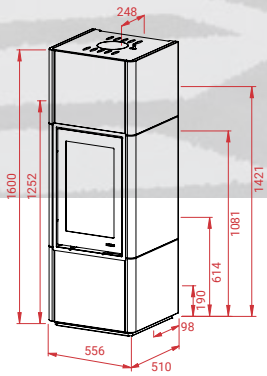

Classic H

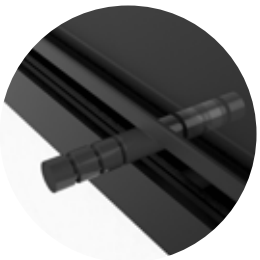

Classic Grey H

Classic Black H

Modern Grey H

Modern Black H

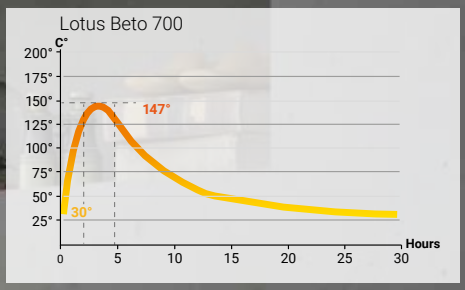

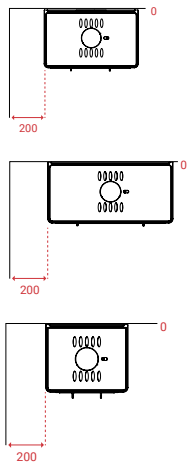

Beto 470W+

Beto 470M+

A

H370 Petite

A+

H470

H370 Petite / H470

A+

H570

A+

H700

A+

H470T

A+

H470W

A+

H570W

Lotus Inserts – Steel

H370 Petite / H470

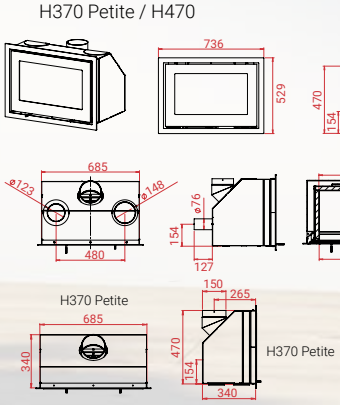

H570

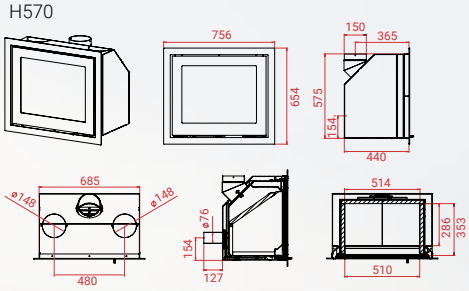

H700

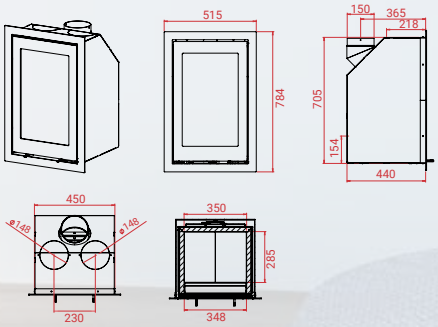

H570T

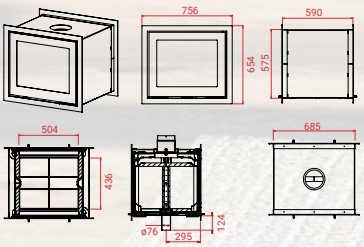

H470W

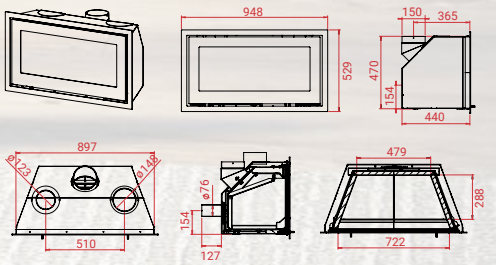

H570W

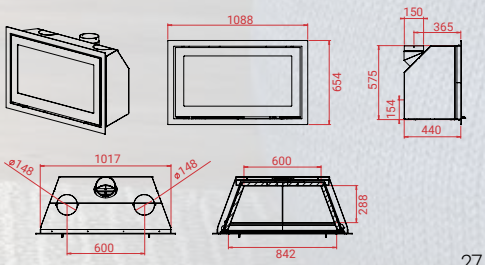

Lotus Inserts – Black Magic

A

H370 Petite

A+

H470

H370 Petite / H470 Black Magic

A+

H570 Black Magic

A+

H700 Black Magic

A+

H470T Black Magic

A+

H470W Black Magic

A+

H570W Black Magic

Classic H

Classic Grey H

Classic Black H

Modern Grey H

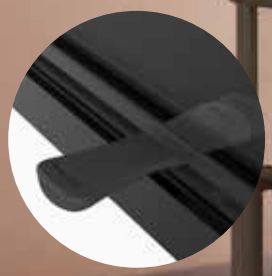

Modern Black H

H370 Petite / H470 Black Magic

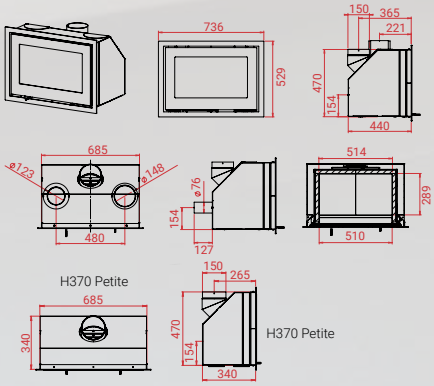

H570 Black Magic

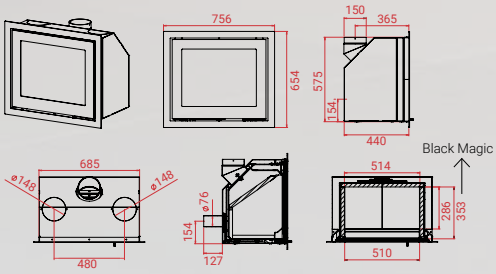

H700 Black Magic

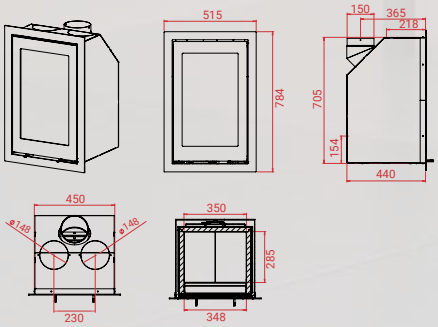

H570T Black Magic

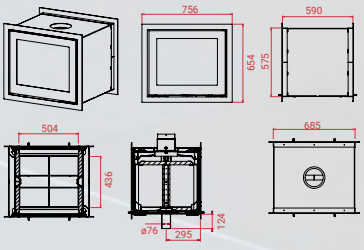

H470W Black Magic

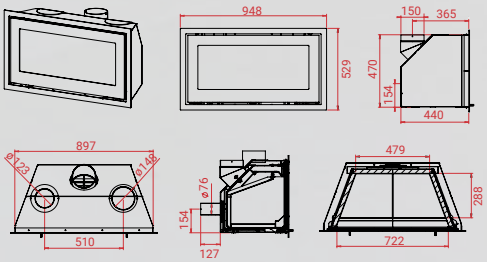

H570W Black Magic

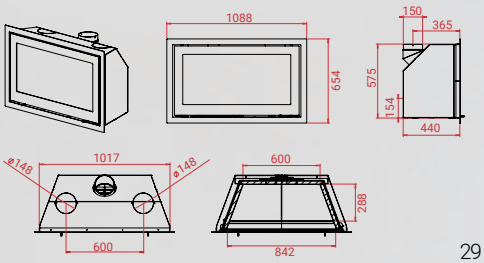

Lotus Inserts – Air

A+

H470 Air

H570 Air

H470W Air

H570W Air

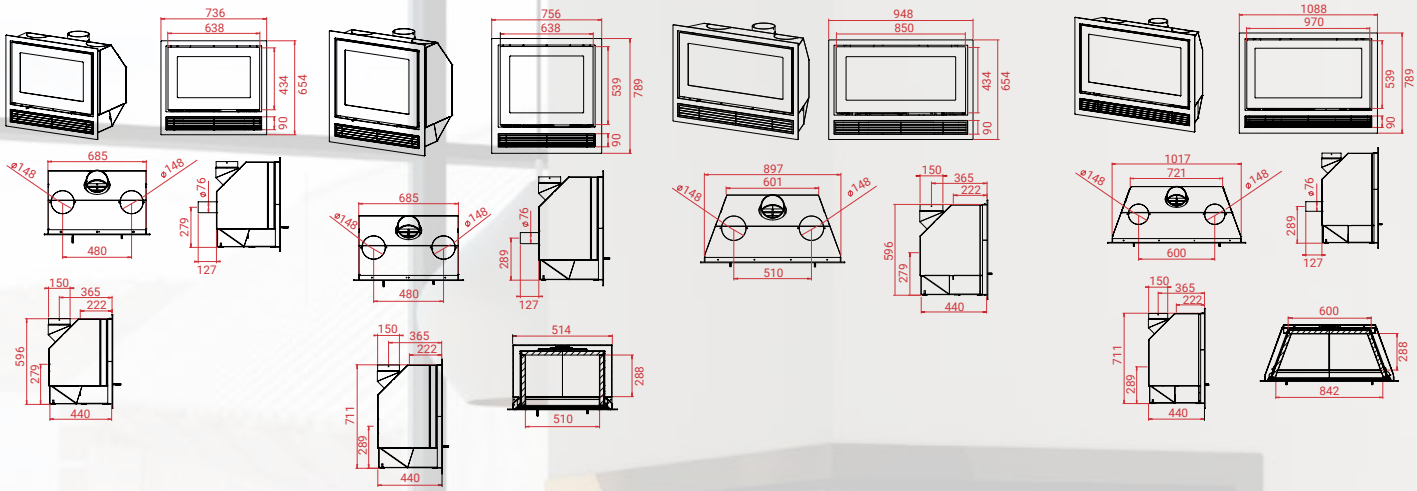

Lotus Unico

A+

Unico 11

Unico 12

Unico 13

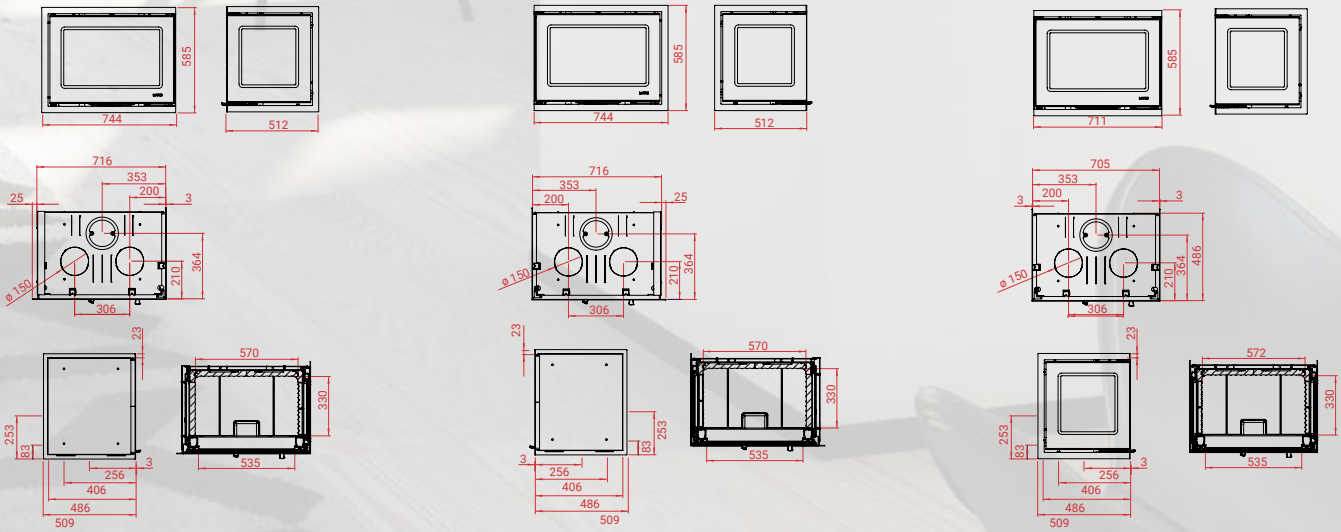

Lotus Liftup

A+

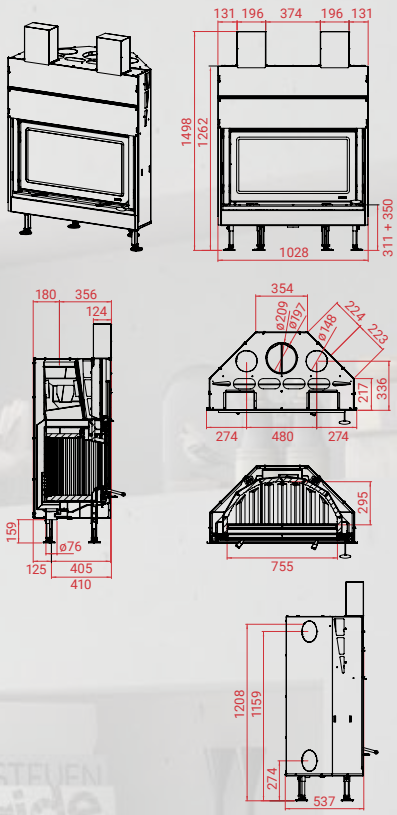

H486

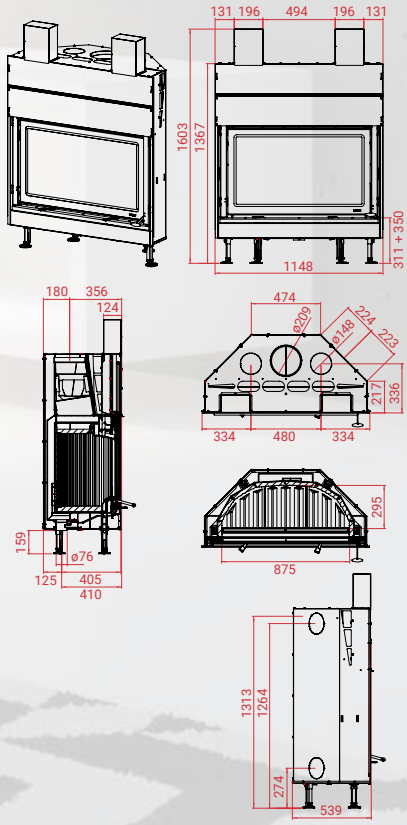

H586

LOTUS
QUALITY FIRST

www.lotusstoves.com

Lotus Heating Systems reserve the right to alter design and specification without prior notice. 8147. LHS-8656. Rek-580. 2018-8

NIBE GROUP MEMBER LOTUS HEATING SYSTEMS AS · Tlf. +45 6323 7070 · www.lotusstoves.com · Email info@lotusstoves.com